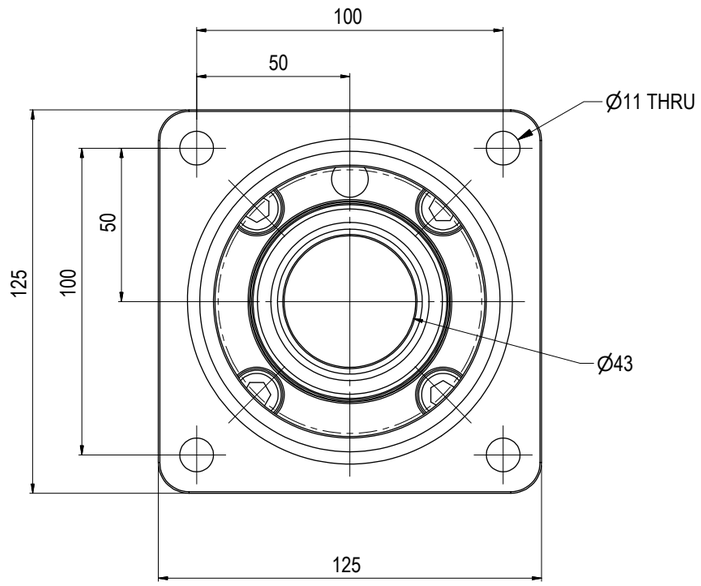

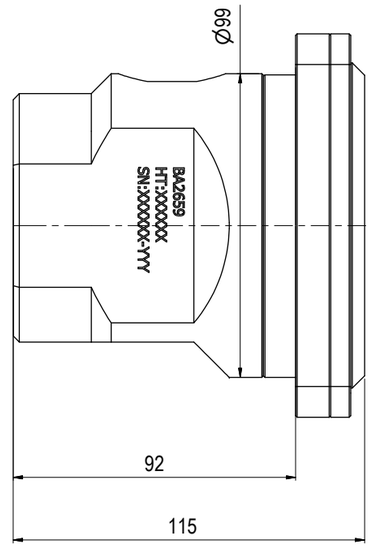

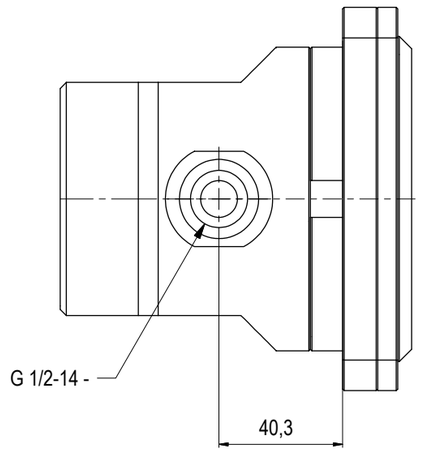

NOTE: 1
DESIGN CODE:
API 17H Type 1

NOTE: 2
TECHNICAL CLASSIFICATION:

Article Type:	001-Hot Stabs
Main Group:	1.03. Ø43 Hot Stab
Intermediate Group:	1.2.02. Receptacle
Sub Group:	1.2.6.01. Single

NOTE: 3
INTERFACE INFORMATION:

Pressure Rating Bar:	690
Design Water Depth:	N/A
Material:	Intervention
Weight:	5,1 kg
Volume:	0,65 dm^3
Submerged Weight:	4,43 kg
Surface Area:	1297 cm^2
Hydraulic:	1/2" BSP
Mechanical:	4xM10@PCD 86
Electrical:	N/A
Com. & Protocol:	N/A

NOTE: 4
SPAREPARTS:
BA5291

NOTE: 5
WEB LINK:
http://e-sea.bluelogic.no/main.aspx?page=article&artno=BA6265

NOTE: 6
ADDITIONAL INFORMATION:
Other hydraulic port interface can be delivered on customers request.

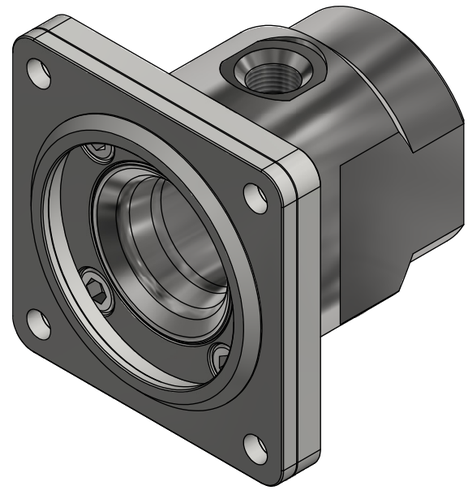

Rev.	Date	Reason for issue	Revision change	Made	Chk'd	Appr.
02	13.4.2015	9-IFU (Issued for Use)		WTJ	HNJ	WTJ
01	29.1.2015	9-IFU (Issued for Use)		WTJ	LGH	WTJ

BLUE LOGIC

This Drawing is the Property of Blue Logic AS © and must Not be Loaned, Reproduced or Transferred to others without written Permission

Dwg Scale: NTS
Dwg Proj:
Dwg Format: A3

Drawing title: Ø43 SP Rec 10k Interv WL BSP 1/2"

Drawing number: BA6265

Rev. 02